# ECEN 714: DIGITAL INTEGRATED CIRCUIT DESIGN
# LAB REPORT - 2

BY: YASHAS BHARADWAJ (UIN - 635009332)

## Inverter

1. Schematic:

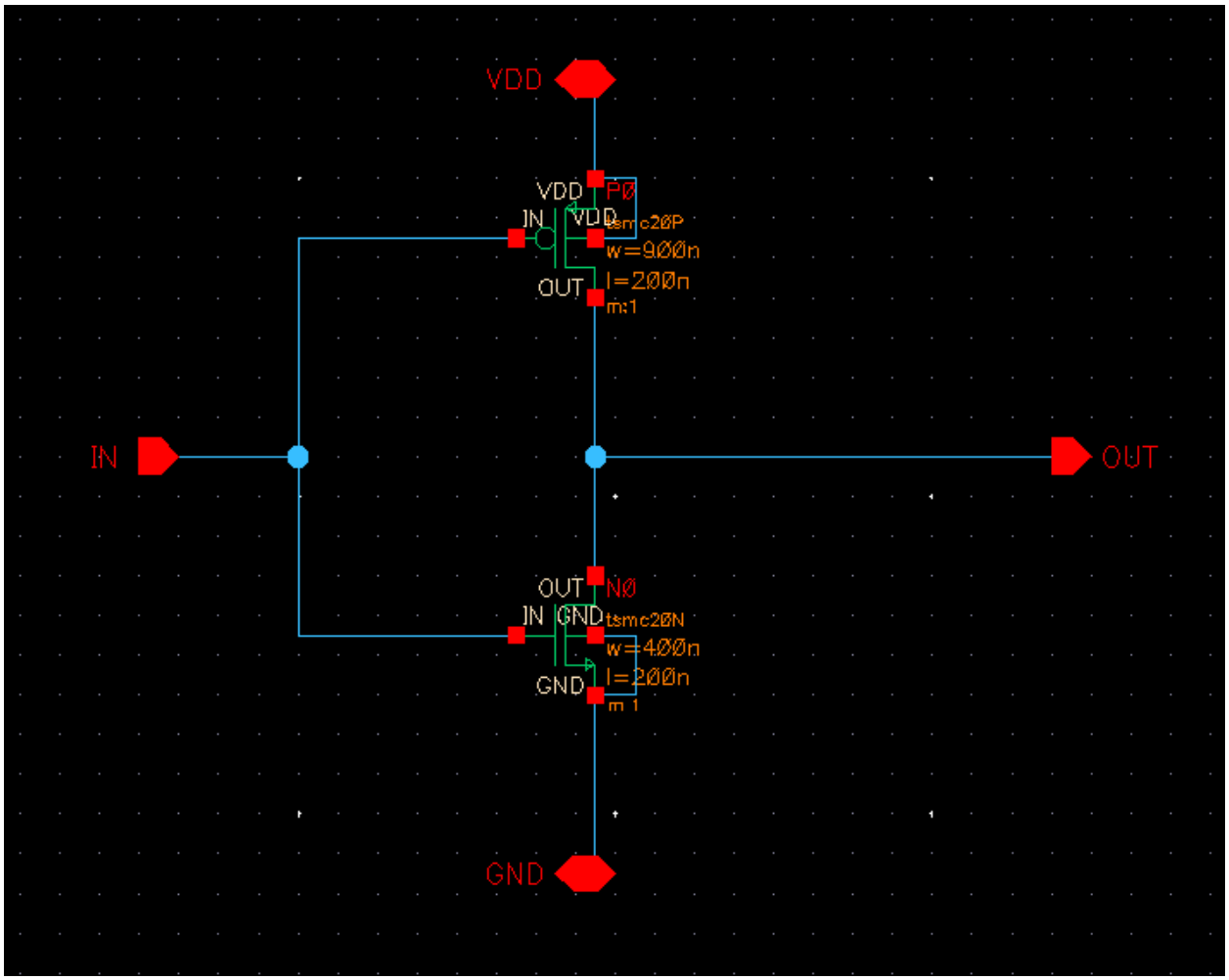

2. Symbol:

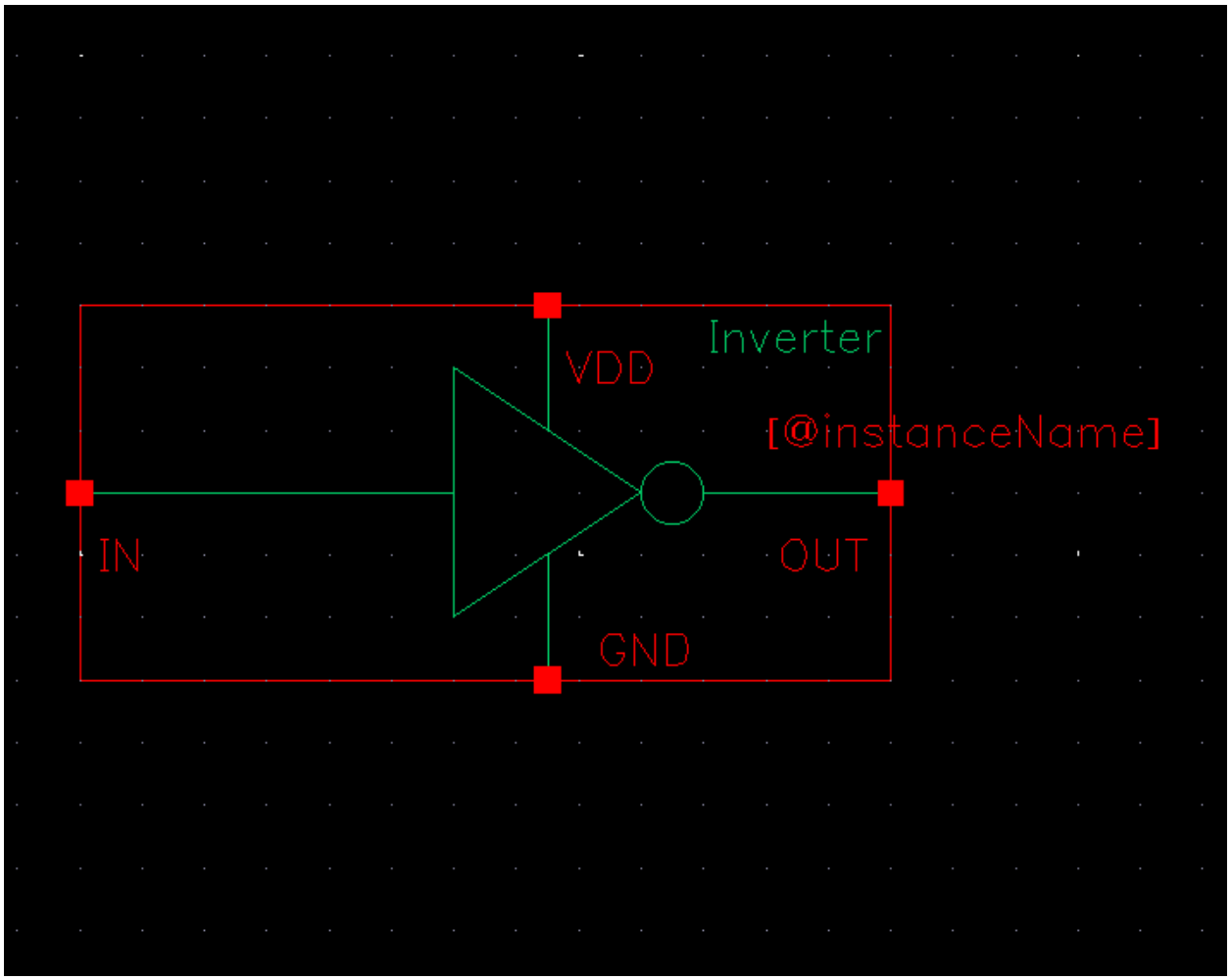

3. Layout:

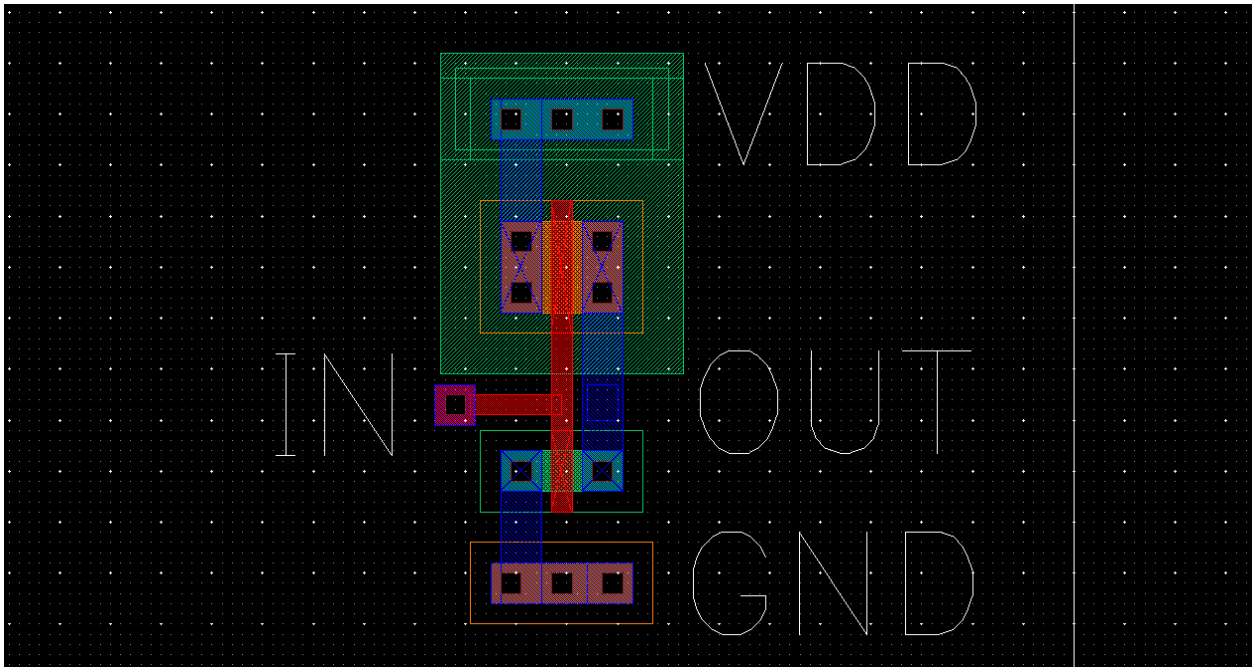


4. Extracted:

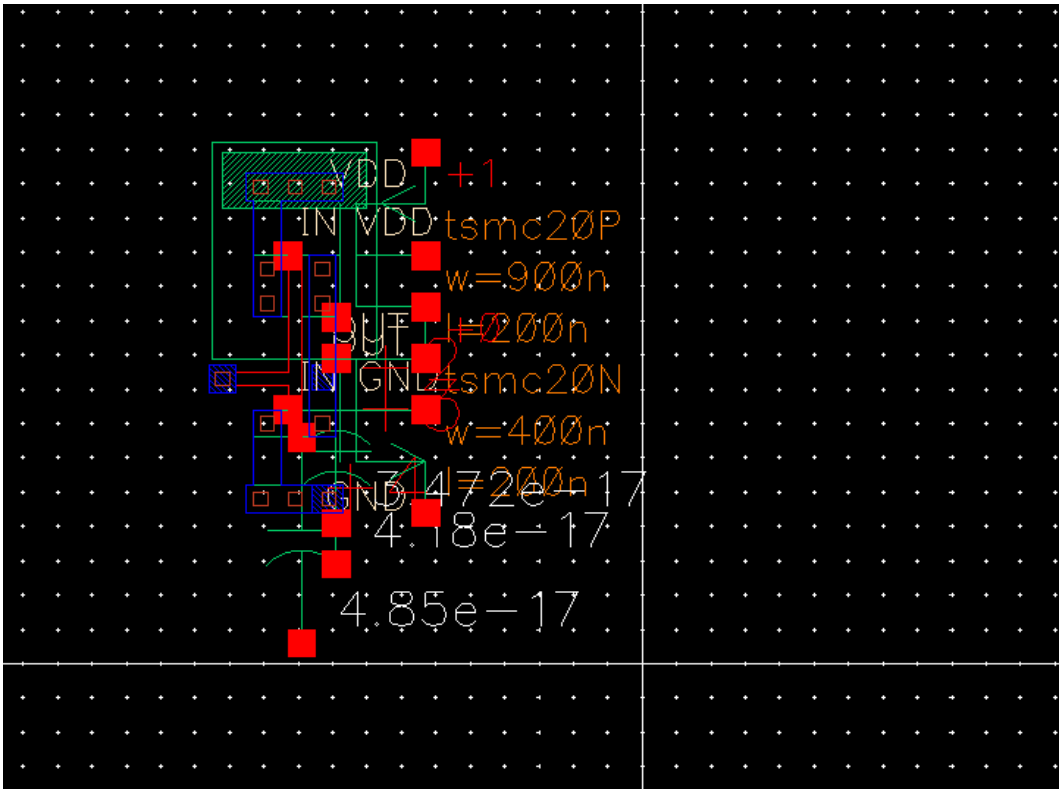

5. LVS Report:

```
/home/grads/y/yashas1729/LVS/si.out@n03-poseidon.olympus.ece.tamu.edu
File  Edit  View  Help
@(#)$CDS: LVS version 6.1.8-64b 09/03/2024 18:56 (sjfhw316) $

Command line: /opt/coe/cadence/IC618/tools.lnx86/dfII/bin/64bit/LVS -dir /home/grads/y/yashas1729/LVS -l -s -t /home/grads/y/yashas1729/LVS/layout /home/grads/y/yashas1729/LVS/schematic
Like matching is enabled.
Net swapping is enabled.
Using terminal names as correspondence points.
Compiling Diva LVS rules...

    Net-list summary for /home/grads/y/yashas1729/LVS/layout/netlist
       count
        11              nets
        5               terminals
        6               pmos
        6               nmos

    Net-list summary for /home/grads/y/yashas1729/LVS/schematic/netlist
       count
        11              nets
        5               terminals
        6               pmos
        6               nmos


    Terminal correspondence points
    N9        N0        A
    N8        N1        B
    N6        N2        GND
    N7        N6        OUT
    N10       N3        VDD

Devices in the netlist but not in the rules:
        pcapacitor
Devices in the rules but not in the netlist:
        cap nfet pfet nmos4 pmos4

The net-lists match.

                              layout  schematic
                                 instances
        un-matched               0       0
        rewired                  0       0
        size errors              0       0
        pruned                   0       0
        active                   12      12
        total                    12      12

                                   nets
        un-matched               0       0
        merged                   0       0
        pruned                   0       0
        active                   11      11
        total                    11      11

                                 terminals
        un-matched               0       0
```

# NAND2 Gate

1. Schematic:

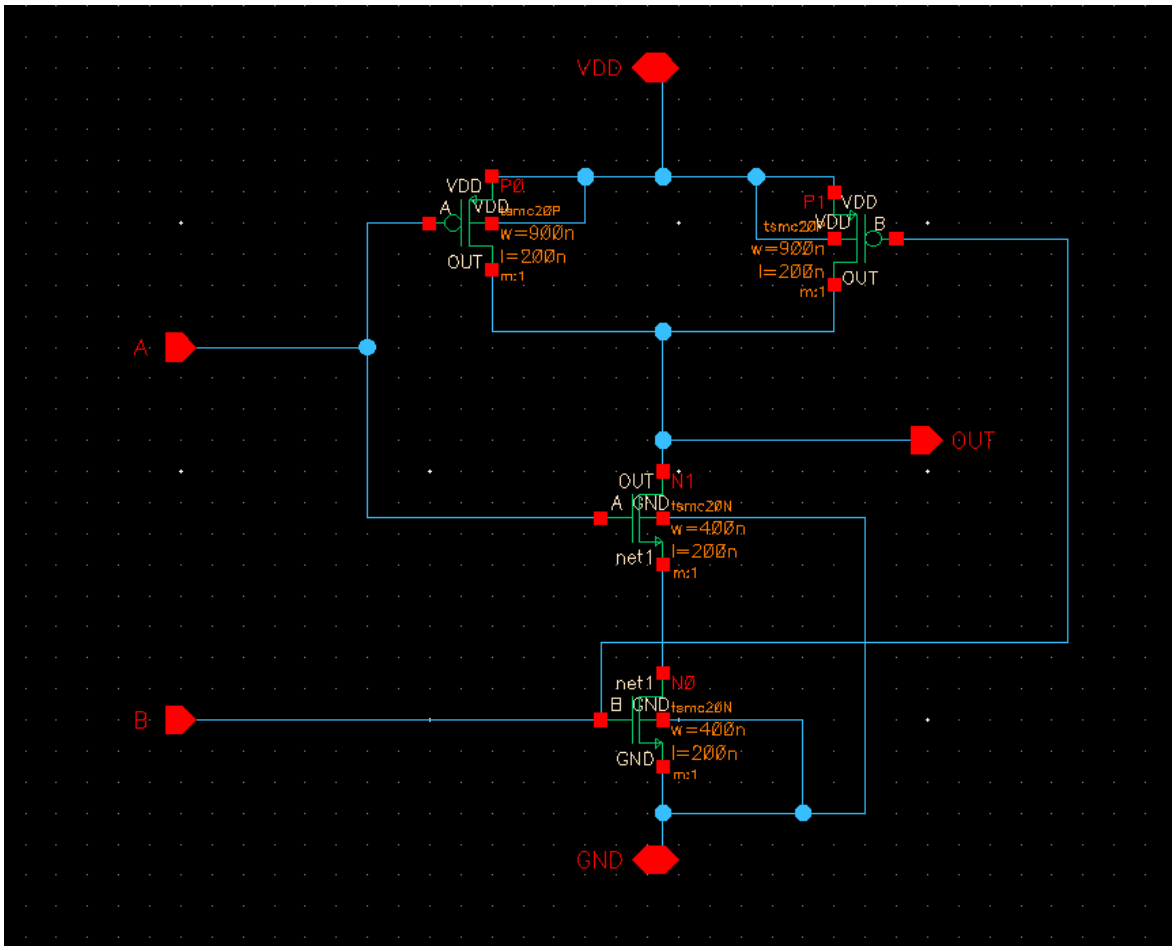

2. Symbol:

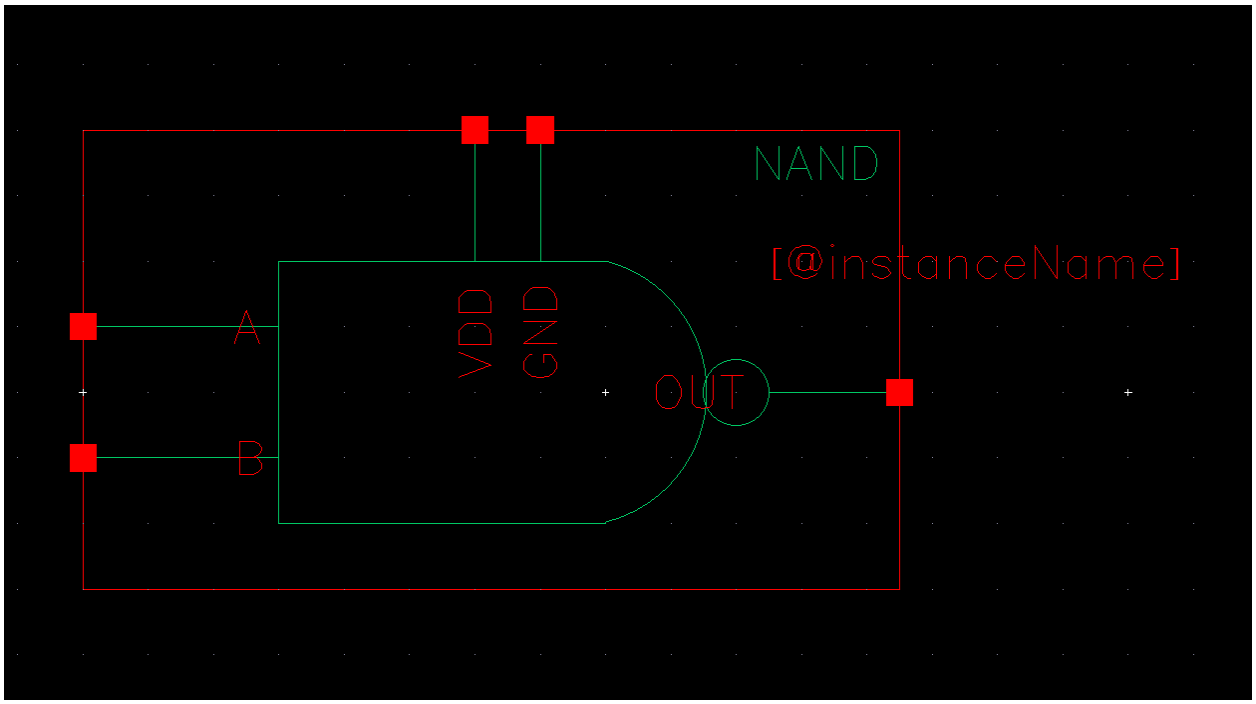


3. Layout:

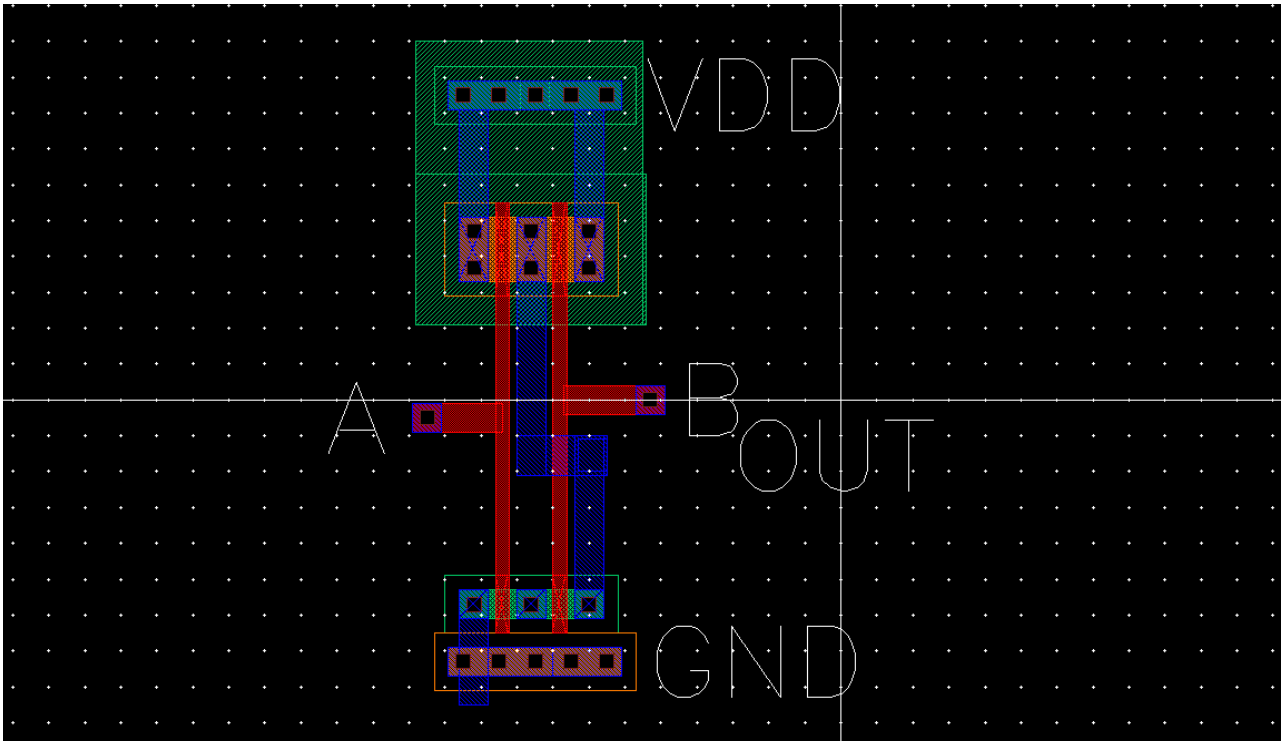

4. Extracted:

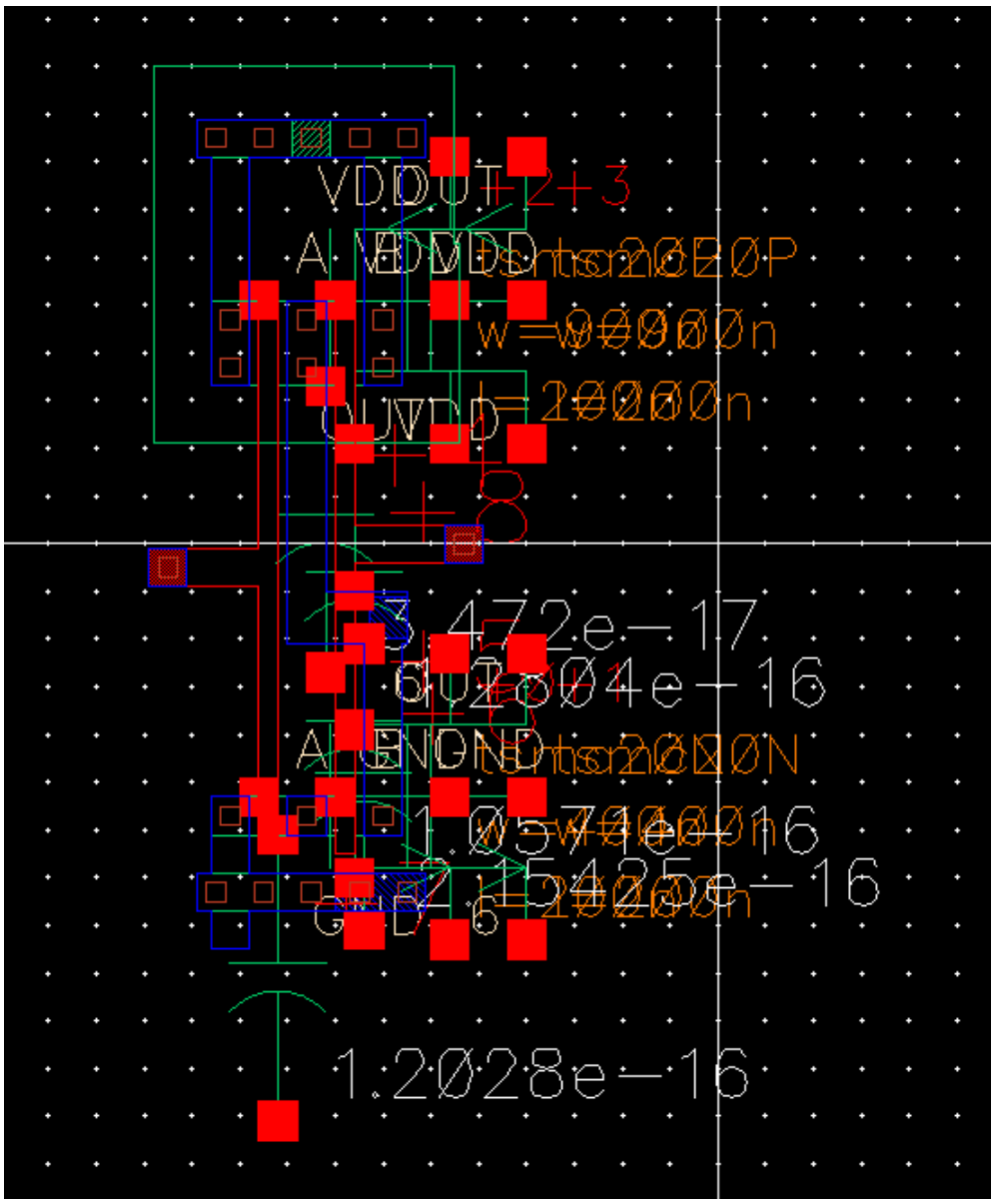
VDDUT
2+3
A VDDD
w=90000n
l=20000n
QUVDD
5.472e-17
6.0204e-16
A GND
1.0574e-16
2.1542e-16
GND
1.2028e-16

5. LVS Report:

/home/grads/y/yashas1729/LVS/si.out@n03-poseidon.olympus.ece.tamu.edu

File Edit View Help

```
Compiling Diva LVS rules...

    Net-list summary for /home/grads/y/yashas1729/LVS/layout/netlist
       count
        11              nets
        5               terminals
        6               pmos
        6               nmos

    Net-list summary for /home/grads/y/yashas1729/LVS/schematic/netlist
       count
        11              nets
        5               terminals
        6               pmos
        6               nmos


    Terminal correspondence points
    N9        N0        A
    N8        N1        B
    N6        N2        GND
    N7        N6        OUT
    N10       N3        VDD

Devices in the netlist but not in the rules:
        pcapacitor
Devices in the rules but not in the netlist:
        cap nfet pfet nmos4 pmos4

The net-lists match.

                              layout  schematic
                                 instances
        un-matched               0       0
        rewired                  0       0
        size errors              0       0
        pruned                   0       0
        active                   12      12
        total                    12      12

                                   nets
        un-matched               0       0
        merged                   0       0
        pruned                   0       0
        active                   11      11
        total                    11      11

                                 terminals
        un-matched               0       0
        matched but
        different type           0       0
        total                    5       5


Probe files from /home/grads/y/yashas1729/LVS/schematic
```

# XOR2 Gate

1. Schematic:

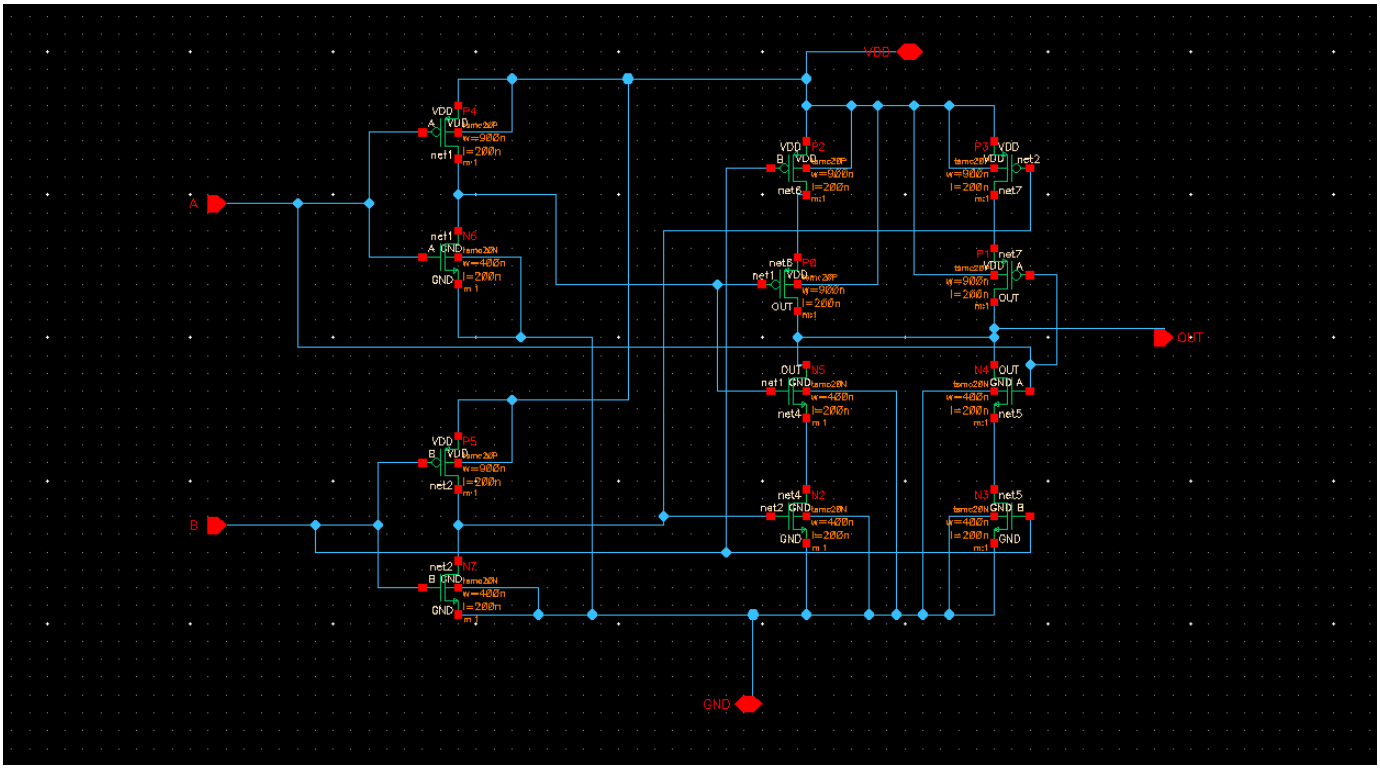


2. Symbol:

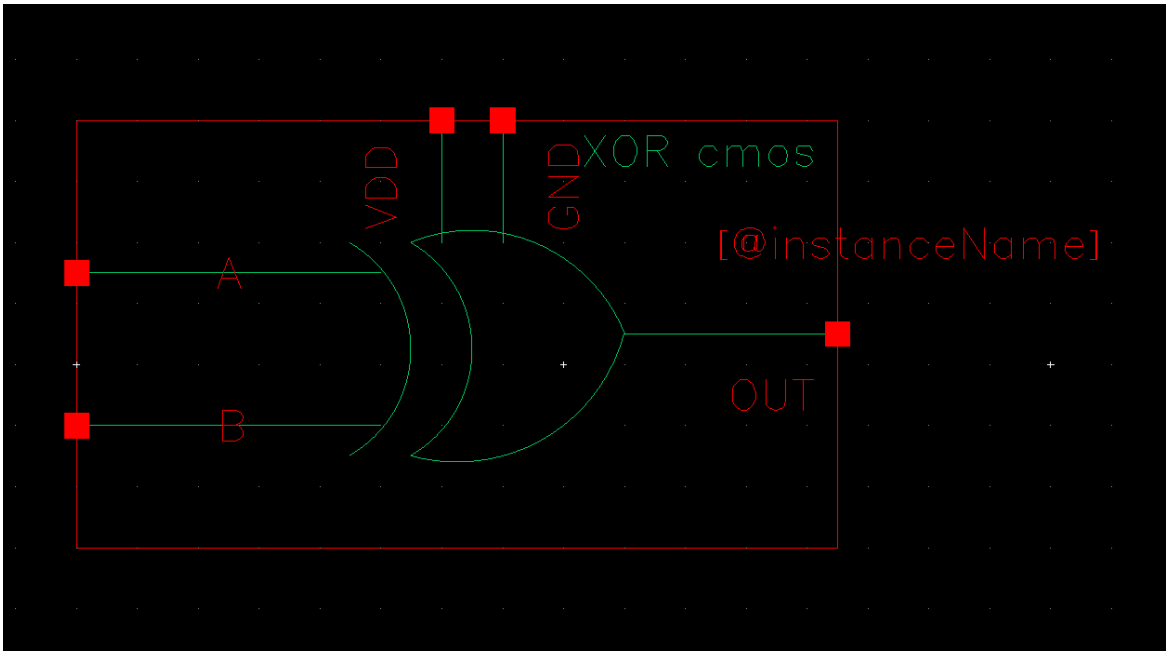

3. Layout:

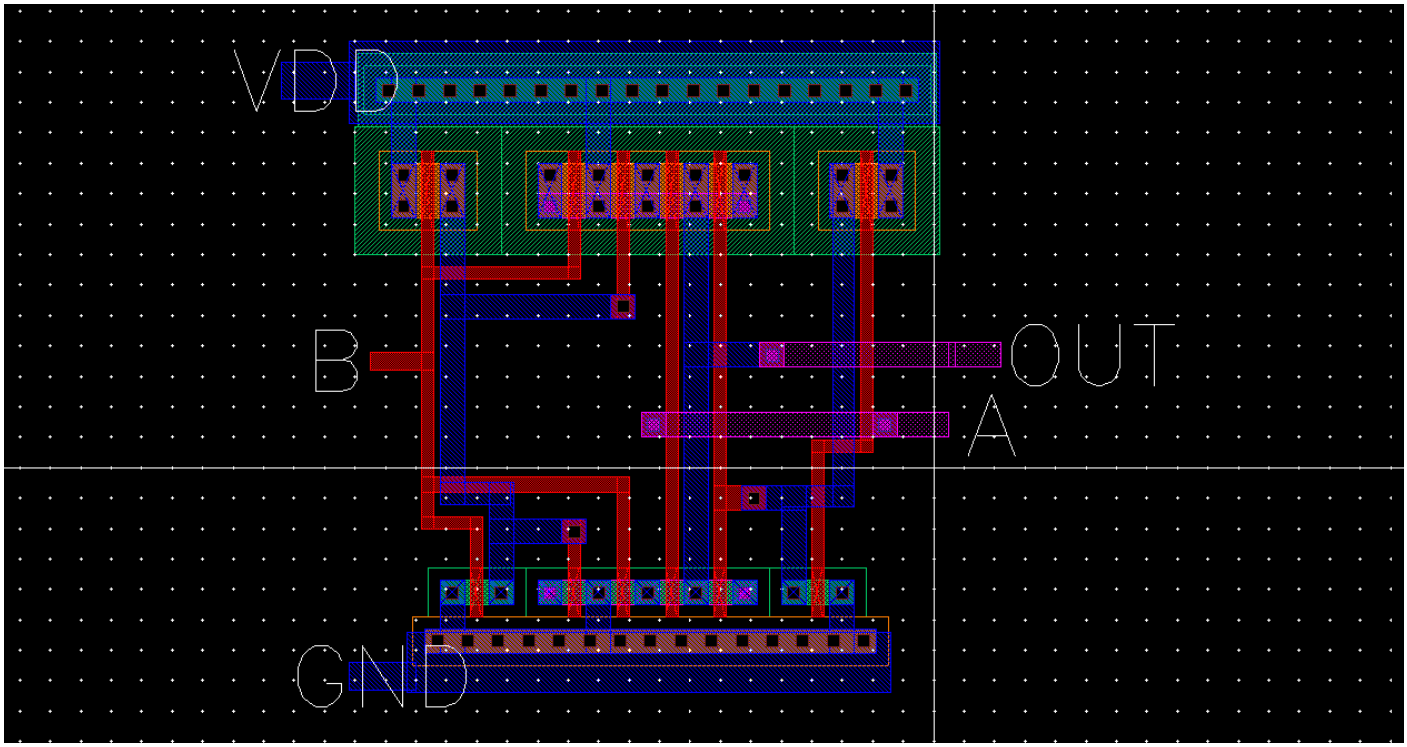


4. Extracted:

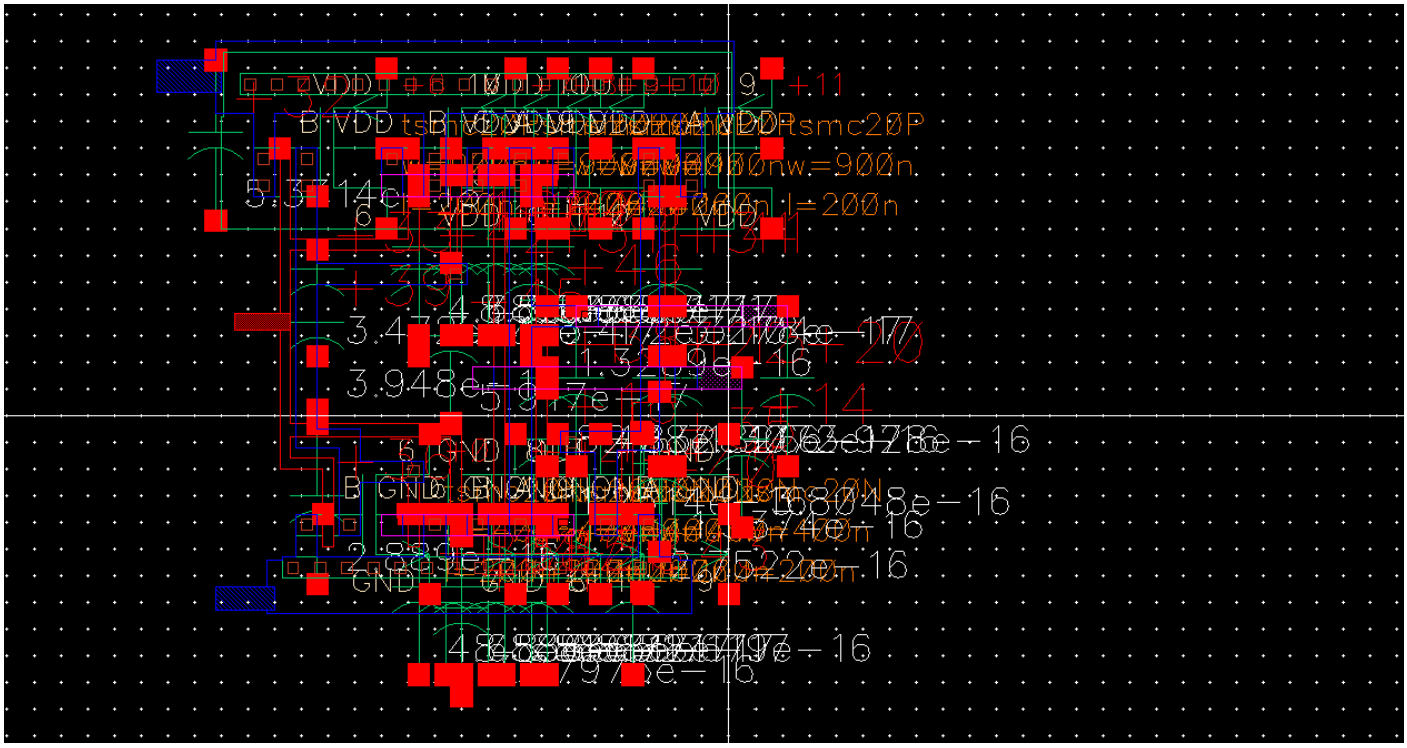

5. LVS Report:

/home/grads/y/yashas1729/LVS/si.out@n03-poseidon.olympus.ece.tamu.edu

File Edit View Help

```
    Net-list summary for /home/grads/y/yashas1729/LVS/layout/netlist
       count
        11              nets
        5               terminals
        6               pmos
        6               nmos

    Net-list summary for /home/grads/y/yashas1729/LVS/schematic/netlist
       count
        11              nets
        5               terminals
        6               pmos
        6               nmos


    Terminal correspondence points
    N9        N0        A
    N8        N1        B
    N6        N2        GND
    N7        N6        OUT
    N10       N3        VDD

Devices in the netlist but not in the rules:
        pcapacitor
Devices in the rules but not in the netlist:
        cap nfet pfet nmos4 pmos4

The net-lists match.

                              layout  schematic
                                 instances
        un-matched               0       0
        rewired                  0       0
        size errors              0       0
        pruned                   0       0
        active                   12      12
        total                    12      12

                                   nets
        un-matched               0       0
        merged                   0       0
        pruned                   0       0
        active                   11      11
        total                    11      11

                                 terminals
        un-matched               0       0
        matched but
        different type           0       0
        total                    5       5


Probe files from /home/grads/y/yashas1729/LVS/schematic
```